Micromotion GmbH, Phone: +49 (0) 6431 – 569 18 – 25, E-mail: sales@micromotion.de

Attributes

Highlights	Description
▪ **High repeatability** ▪ **Vacuum suitable lubrication** ▪ **Zero backlash with optimised fit between speed and resolution** ▪ **Easy controllability** ▪ **Preloaded ball bearing**	The MaalonDrive® HighVac 8mm - type 1 micro positioning system was designed for use in high-vacuum environments, is lubricated with Fomblin and is characterised, in particular, by its compact design and high positioning resolution. The combination of a zero-backlash MaalonDrive® gear with a reduction ratio of 160:1 with an EC motor with rated voltage of 6V results in a precise, high-performance micro drive system. The gear is equipped with a preloaded ball bearing and an output shaft with application-specific design.

Micromotion GmbH, Phone: +49 (0) 6431 – 569 18 – 25, E-mail: sales@micromotion.de

Technical parameter

The stated values are based on calculations and measurements by Micromotion GmbH, carried out according to the current state of the art. You can find our definitions at www.micromotion-drives.com. For further information please contact sales@micromotion.de.

P-019

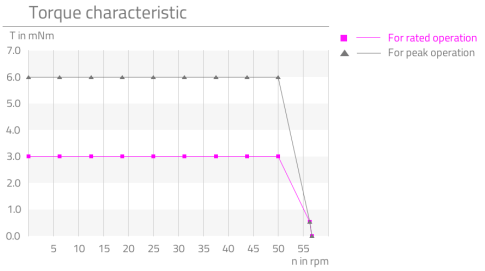

P-029

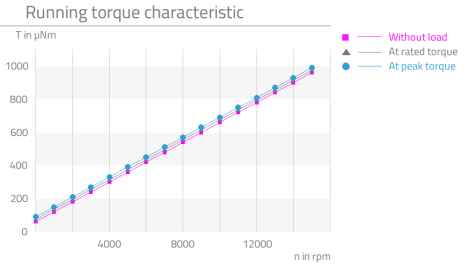

Nr.	Parameter	Symbol	Value	Hint
P-001	Vacuum suitable		HV	
P-003	Ratio	i	160 : 1	
P-004	Self-locking		yes	
P-008	Repeatability unidirectional		22.5 arcsec	
P-009	Repeatability bidirectional		30 arcmin	
P-010	Accuracy		14 arcmin	
P-011	Transmission accuracy		28 arcmin	
P-012	Resolution		0.03516 °	
P-013	Torsional stiffness		2.29 Nm/rad	
P-014	Lost motion		22.5 arcmin	
P-015	Backlash		0 arcmin	
P-016	Rated torque	T	3 mNm	
P-017	Peak torque	T	6 mNm	
P-018	Momentary peak torque	T	20 mNm	
P-021	Rated input speed	n	10000 rpm	
P-022	Maximum input speed	n	30000 rpm	
P-023	Rated output speed	n	62.5 rpm	
P-024	Maximum output speed	n	187.5 rpm	
P-026	No-load starting torque	T	90 µNm	

Micromotion GmbH, Phone: +49 (0) 6431 – 569 18 – 25, E-mail: sales@micromotion.de

Nr.	Parameter	Symbol	Value	Hint
P-027	No-load running torque	T	60 µNm	
P-028	Rated running torque	T	690 µNm	
P-034	Lifetime for rated operation		500 h	
P-035	Radial backlash output shaft		0 µm	
P-036	Axial backlash output shaft		0 µm	
P-037	Radial stiffness	c	0.87 N/µm	
P-038	Axial stiffness	c	18.5 $^{N}/_{\mu m}$	
P-039	Max. radial load on output shaft (non-operating, constant load)	F	20 N	
P-040	Max. radial load on output shaft (non-operating, impulsive load)	F	5 N	
P-041	Max. radial load on output shaft (operating, constant load)	F	3 N	
P-042	Max. radial load on output shaft (operating, impulsive load)	F	3 N	
P-043	Max. axial load on output shaft (non-operating, constant	F	64 N	
P-044	Max. axial load on output shaft (non-operating, impulsive load)	F	20 N	
P-045	Max. axial load on output shaft (operating, constant load)	F	185 N	
P-046	Max. axial load on output shaft (operating, impulsive load)	F	66 N	
P-055	Moment of inertia	I	$302 * 10^{-4}$ gcm^2	
P-056	Weight	m	5 g	
P-057	Min. permissible ambient temperature (non-operating)	T	-20 °C	
P-058	Min. permissible ambient temperature (operating)	T	-10 °C	
P-059	Max. permissible ambient temperature (non-operating)	T	125 °C	
P-060	Max. permissible ambient temperature (operating)	T	100 °C	

Motor data: Brushless DC-Servomotor 0620K006B-K179B high vacuum

(Data are provided by the manufacturer or are based on the data sheets of the manufacturer)

Nr.	Parameter	Symbol	Value	Hint
P-100	Motortype		EC	
P-102	Maximum speed of motor	n	100000 rpm	
P-104	Speed constant of motor	Kn	8761 $^{rpm}/_{V}$	

Micromotion GmbH, Phone: +49 (0) 6431 – 569 18 – 25, E-mail: sales@micromotion.de

Nr.	Parameter	Symbol	Value	Hint
P-106	Stall torque of motor	T	0.732 mNm	
P-107	Torque constant of motor	Km	1.09 $^{mNm}/_{A}$	
P-108	No-load current of motor	I	56 mA	
P-110	Max. continuous current of motor	I	311 mA	1)
P-111	Rated voltage of motor	U	6 V	
P-112	Phase resistance of motor	R	8.8 ohm	
P-113	Inductance of motor	L	0.028 mH	
P-114	Amplitude BEMF of motor	U	0.114 mV/rpm	
P-118	Max. coil temperature of motor	T	125 °C	
P-119	Thermal resistance of motor between coil and housing	R_{th1}	13.2 $^{K}/_{W}$	
P-120	Thermal resistance of motor between housing and air	R_{th2}	84.3 $^{K}/_{W}$	
P-121	Thermal time constant of the coil of the motor	τ_{w1}	1100 ms	
P-122	Thermal time constant of the housing of the motor	τ_{w2}	89000 ms	

Encoder data

(Data are provided by the manufacturer or are based on the data sheets of the manufacturer)

Nr.	Parameter	Symbol	Value	Hint
P-201	Impulses per revolution of encoder		64	
P-202	Channels of encoder		A, B, I	
P-203	Frequency range of encoder	f	32 kHz	
P-204	Operating voltage of encoder	U	5 ±0.5 V	
P-205	Rated current consumption of encoder	I	9 mA	2)
P-207	Signal/phase shifting of encoder		90±45 °	
P-208	Signal build-up/decay time of encoder	t	60/60	

Material information

Nr.	Parameter	Symbol	Value	Hint
P-900	RoHS compliant		yes	
P-901	Lubrication of output bearing gearbox		FomblinGRM60	
P-903	Lubrication of gear component set		FomblinGRM60	
P-904	Lubrication of bearing motor		FomblinGRM60	

Micromotion GmbH, Phone: +49 (0) 6431 – 569 18 – 25, E-mail: sales@micromotion.de

Nr.	Parameter	Symbol	Value	Hint
P-908	Material of gear component set		NiFe	
P-909	Material of output bearing gearbox		1.4108 DIN EN	
P-911	Material of bearing motor		Stainless steel	
P-912	Material of gearbox output side		1.4305 DIN EN	
P-914	Material of motor housing		Aluminium, black coated	

2) Supply = 5V; unloaded outputs
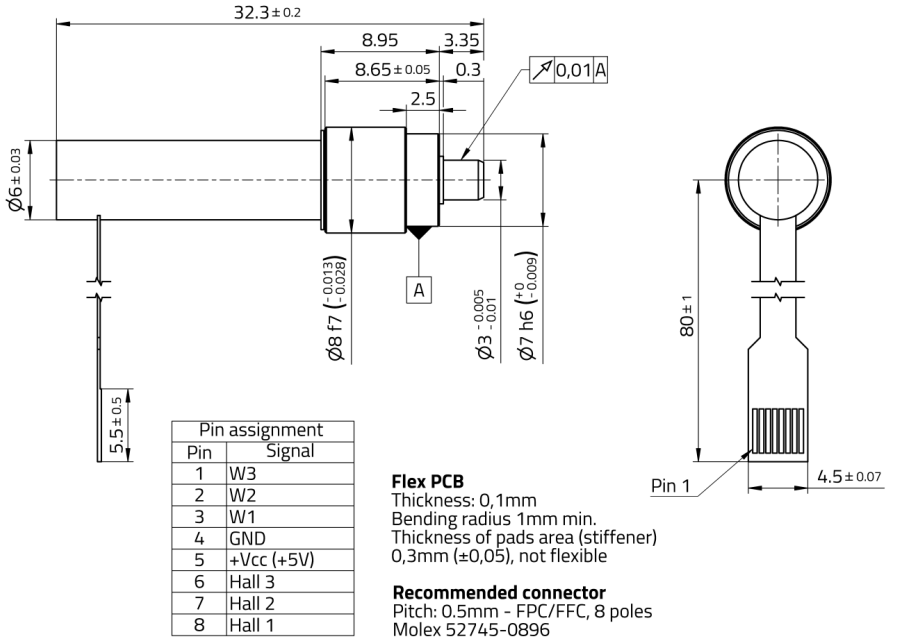
Technical drawing